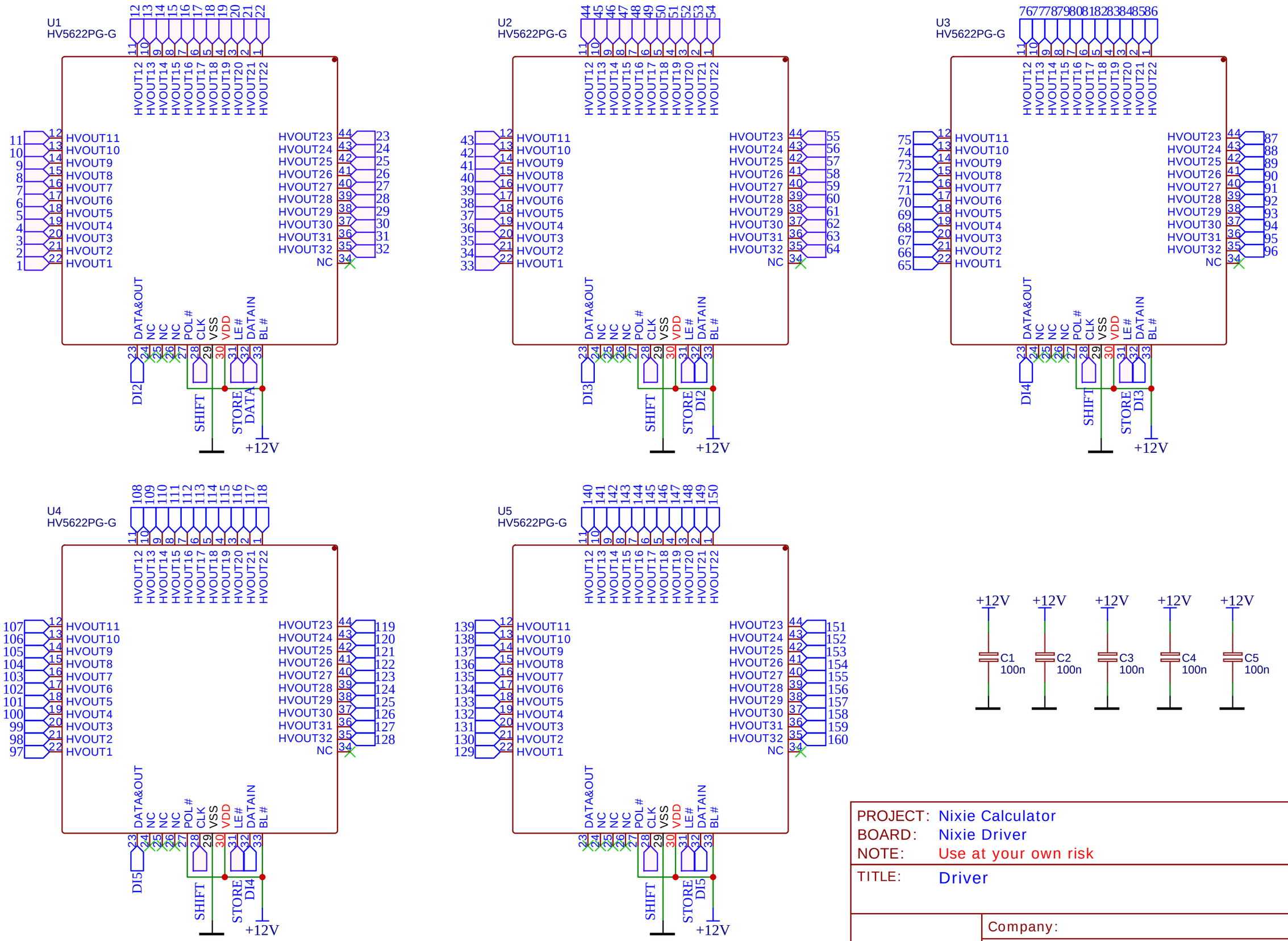

PROJECT:	Nixie Calculator
BOARD:	Nixie Driver
NOTE:	Use at your own risk
TITLE:	Driver
REV:	1
Company:	
Sheet:	1/2
Date:	2021-05-20
Drawn By:	

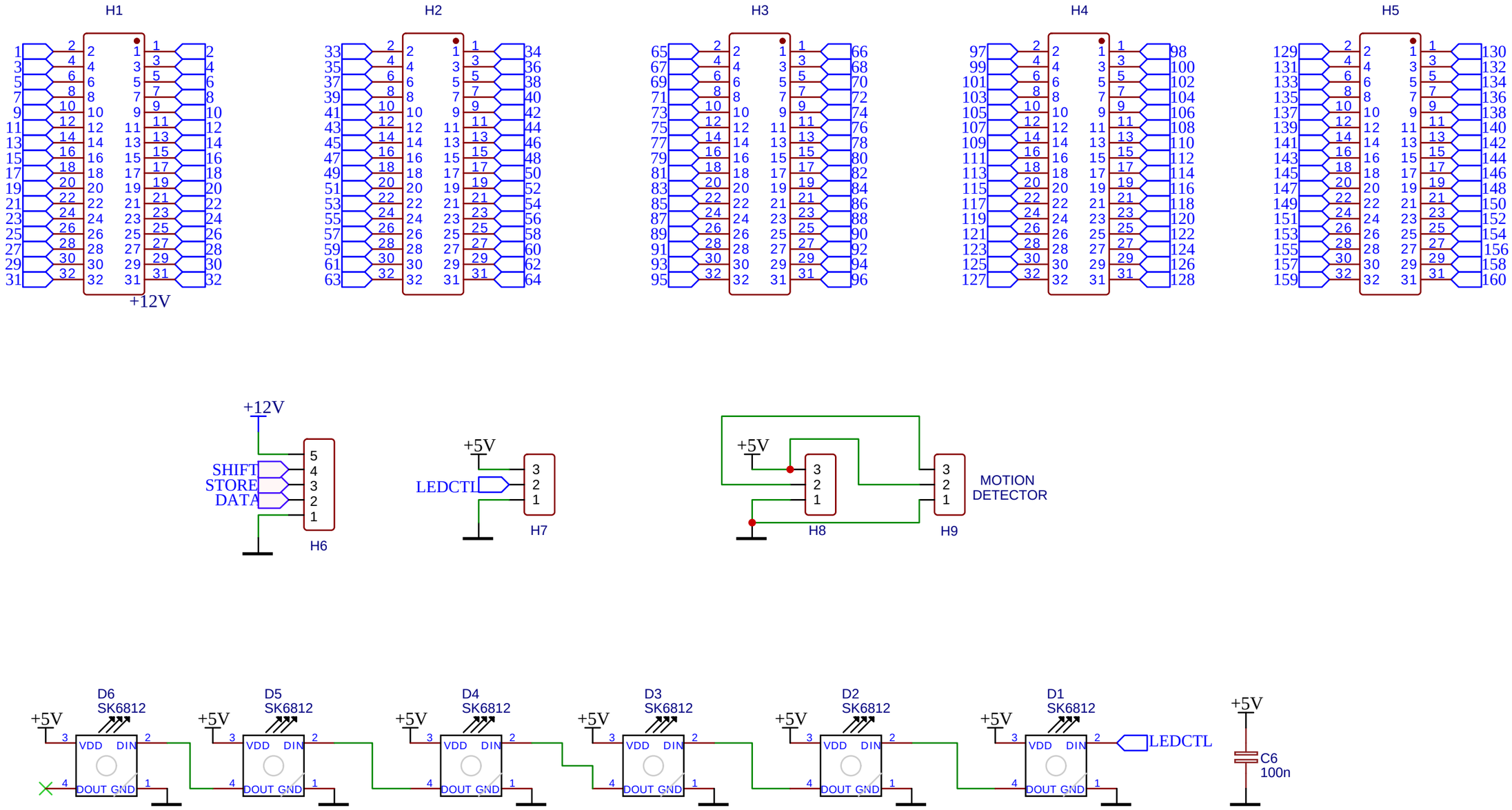

PROJECT: Nixie Calculator
BOARD: Nixie Driver
NOTE: Use at your own risk

TITLE: Connectors & Backlight

REV: 1

Company:

Sheet: 2/2

Date: 2021-05-20 Drawn By: